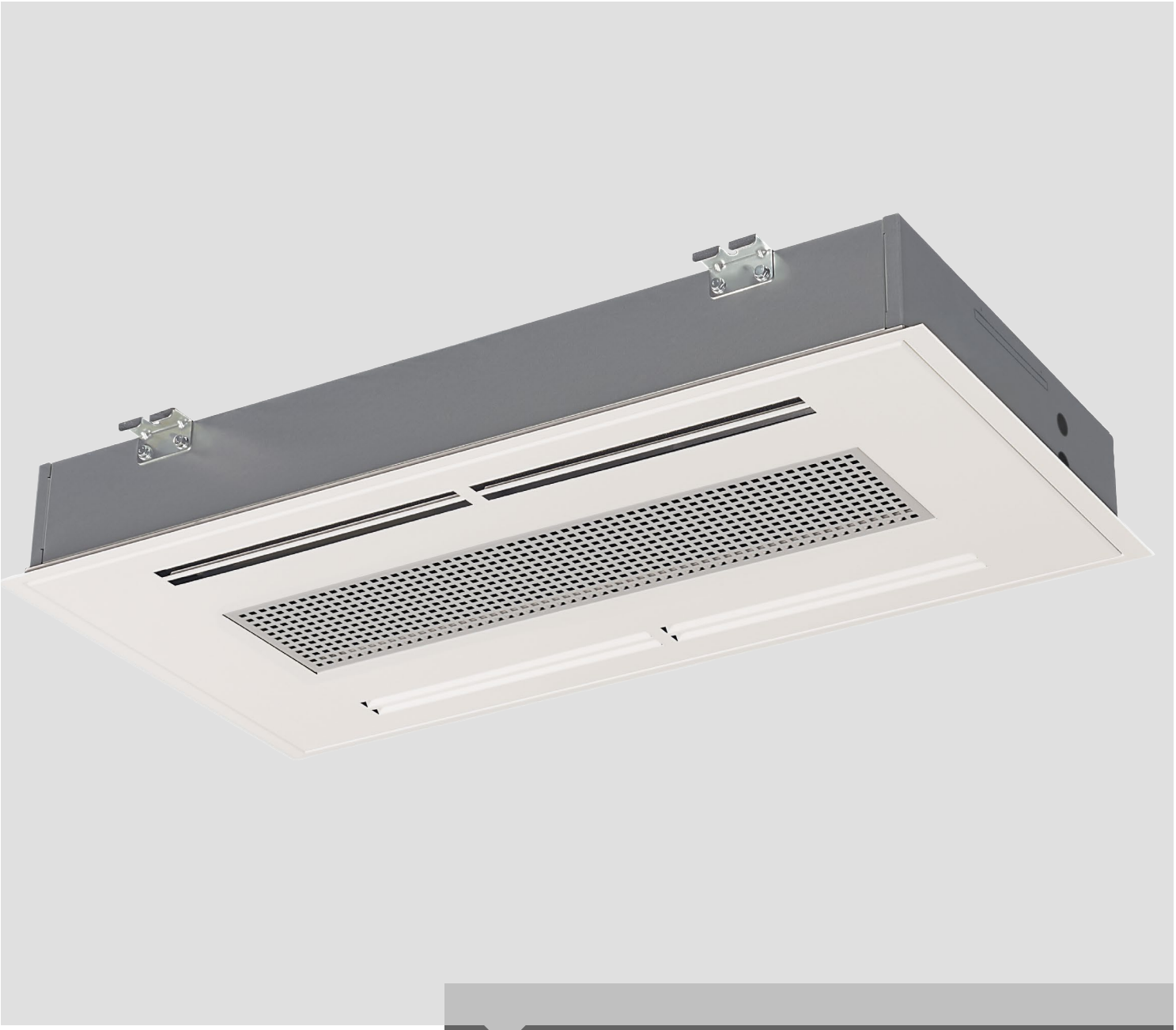

KaDeck ceiling cassette

Installation and operating instructions

Keep these instructions in a safe place for future use!

KAMPMANN
Genau mein Klima.

I610 11/20 US | SAP Nr. 1341610

3.26 KaDeck

Versatile air conditioning for offices and administration buildings

Installation and operating instructions

KAMPMANN
Genau mein Klima.

1 General

1.1 About these instructions

These instructions ensure the safe and efficient handling of this equipment. These instructions form an integral part of the unit and must be kept in the direct vicinity of the unit and available to personnel at all times.

All personnel must have carefully read through these instructions prior to commencing all work on the equipment. A fundamental prerequisite for safe working is compliance with all the stated safety instructions and other instructions contained in this manual.

In addition all local occupational health and safety at work regulations apply, as do general safety provisions governing the use of the equipment.

Illustrations in this guide are intended to provide a basic understanding and may differ from the actual model.

1.2 Explanation of symbols

Important notes

DANGER!
This combination of symbol and signal word indicates an immediately dangerous situation, which will cause death or injuries if not avoided.

IMPORTANT NOTE!
This combination of symbol and signal word indicates a possible dangerous situation, which can cause material and environmental damage if not avoided.

This symbol highlights useful hints, recommendations and information for efficient and trouble-free operation.

Other labels

The following labels are used in this manual to highlight instructions, results, listings, references and other elements:

Label	Explanation
▶	Step-by-step instructions
⇨	Results of actions
↳	Reference to sections of the manual and other applicable documents
■	Lists without specified sequence
[Button]	Operating element (e.g. button, switch), display element (e.g. indicator light)
"Display"	Display elements (e.g. buttons, assignment of function keys)

1.3 Copyright protection

1.4 Customer service

Our Customer Service team is available for technical information:

Address	Heating, Cooling, Ventilation Ltd 1628 West 1st Ave Suite #221 Vancouver, BC Canada V6J 1G1
Phone	+1 604 789 5779
Email	info@kampmann.ca
Website	www.kampmann.ca

We are always interested in receiving information and experiences relating to the use of our products which could be of value for improving our products.

2 Safety

This section provides an overview of all important safety aspects to ensure optimum protection of personnel as well as safe and trouble-free operation. Additional order-related safety information is contained in the sections covering the individual phases of the product's life.

2.1 Intended use

The units are only intended to be used for heating and cooling air in frost-free and dry rooms. Within the room, the unit needs to be connected to the building's heating/cooling/ventilation system and to the building's waste water and power network.
The units are intented for installation at a level not less than 2.5 m and thus are not accessible to the general public.
This appliance is not intended for use by persons (including children) with reduced physical, sensory or mental capabilities, or lack of experience and knowledge, unless they have been given supervision or instruction concerning use of the appliance by a person responsible for their safety. Children should be supervised to ensure that they do not play with the appliance.
This appliance is only intended for use at altitudes below 2000 m.
This appliance is not intended for connection to the drinking water network.

Intended use of the unit also includes adherence to these instructions.

Any use beyond or other than the stated intended use is considered misuse.

2.2 Limits of operation and use

Limits of operation		
Min./max. water temperature	°C (°F)	5 – 80 (41 – 176)
Min./max. air intake temperature	°C (°F)	15 – 40 (59 – 104)
Min./max. air humidity	%	15 – 75
Max. operating pressure	bar	8 (267.65 ftH20)
Min./max. glycol percentage	%	25 – 50
Max. relative air humidity	60 % at 27 °C (80 °F) ambient temperature	

The following values provide guidance regarding to the water quality.
The water used should be free of contamination, such as suspended substances and reactive substances.

Water quality		
pH value*1		8 – 9
Conductivity*1	µS/cm	< 700
Oxygen content (0_2)	mg/l	< 0.1
Hardness	°dH	4 – 8.5
Sulphur ions (S)		not measurable
Sodium ions (Na^+)	mg/l	< 100
Iron ions (Fe^{2+}, Fe^{3+})	mg/l	< 0.1
Manganese ions (Mn^{2+})	mg/l	< 0.05
Ammonia ions (NH^{4+})	mg/l	< 0.1
Chlorine ions (Cl)	mg/l	< 100
CO_2	ppm	< 50
Sulphate ions (SO_4^{2-})	mg/l	< 50
Nitrite ions ($N0_2^-$)	mg/l	< 50
Nitrite ions ($N0_3^-$)	mg/l	< 50

WARNING!
Warning of misuse!

- Never operate the unit in humid areas, such as swimming pools, wet areas etc.
- Never operate the unit in rooms with an explosive atmosphere.
- Never operate the unit in rooms with a high dust content.
- Never operate the unit in rooms that contain high-temperature gases.
- Never operate the unit in aggressive or corrosive atmospheres (e.g. sea air).
- Never operate the unit above electrical equipment, such as switch cabinets, computers or other electrical units, or contacts that are not drip-proof.
- Never operate the unit outdoors.
- Keep windows closed during operation.
- Only operate the unit fully assembled and connected to the relevant supply networks (waste water, heating/cooling, electricity).
- Never operate the unit beyond its technical specification (*Chapter 2 "Technical data" on page 6).*
- Install the unit away from heaters or other heating equipment.
- Ensure that the airflow can circulate freely.
- Never place any objects on the unit.
- Never cover the unit.
- Always note the requirements for the installation site (*Chapter 6.1 "Requirements governing the installation site" on page 24).*

2.3. Fundamental dangers

The following section lists residual risks that can be generated by the unit even when operated as intended.

Observe the following safety instructions and the safety information in the other sections of this manual to reduce the risk of injury and damage to property and avoid dangerous situations.

2.3.1 Danger from electrical energy

Electric current

DANGER!

Risk of fatal injury from electrocution!

Contact with live parts will lead to fatal injury from electrocution. Damage to the insulation or individual components can lead to a fatal injury.

- Only permit qualified electricians to work on the electrics.
- The unit must be installed according to the national wiring regulations (NEC).
- The fixed wiring must incorporate a means for disconnection having a separation in all poles, according to the wiring regulations.
- Immediately disconnect the system and repair it in the event of damage to the insulation.
- Keep live parts away from moisture. This can cause a short circuit.
- Properly earth the unit.

2.4 Responsibility of the operator

Duties of the operator

The unit is operated in the commercial sector. The operator of the unit is therefore subject to the legal obligations concerning occupational health and safety.

In addition to the safety instructions in these operating instructions, the valid safety, accident prevention and environmental protection regulations must be observed for the area of use of the unit.

The following applies in particular:

- The operator must be aware of the applicable health and safety regulations and determine in a risk assessment other hazards that may arise from the special working conditions at the site of operation. He then has to implement this in the form of operating instructions for the operation of the unit.
- The operator must regulate and specify the responsibilities for installation, operation, troubleshooting, maintenance and cleaning.
- The operator must ensure that all staff who work on the unit have read and understood these instructions. In addition, he must also train personnel and inform them of the possible dangers at regular intervals.
- It is the responsibility of the operator to provide maintenance and repair personnel with the necessary personal protective equipment and advise them of the necessity to wear it.

Furthermore, the operator is responsible for ensuring that the equipment is always in perfect condition. The following therefore applies:

- The operator must ensure that the maintenance intervals described in this manual are adhered to.

Hygiene requirements

The operator must comply with the specifications in line with the pertinent legal standards and guidelines relating to hygiene applicable at the installation site. This includes ensuring that

- fresh and waste water are hygienically separated,
- the pertinent maintenance and test intervals are complied with,
- the requirements for air ducts and diffusers are complied with,
- the predefined filter grades are complied with.

2.5 Instruction

The manufacturer offers training for users. For contact details please refer to ↳ *Chapter 1.4 “Customer service” on page 5.*

2.6 Personnel requirements

2.6.1 Qualifications

Only permit personnel to carry out work if they can be expected to carry out this work reliably.
People with impaired reactions, possibly due to drugs, alcohol or medication, are not permitted to carry out work.

Qualified electrician
Qualified electricians have been trained for the specific environment in which they work and understand the pertinent standards and regulations.

Installation personnel
This training provides installation personnel with the technical knowledge and experience, as well as knowledge of the pertinent regulations, needed to carry out the assigned tasks and independently recognise possible dangers. Installation personnel have all the necessary equipment and tools.

Caretakers/users
Caretakers/users have been instructed by the manufacturer in the tasks assigned to them and possible dangers of improper conduct. Caretakers/users are only permitted to carry out tasks that go beyond normal operation if this is specified in this manual.

2.7 Personal protective equipment

Personal protective equipment is used to protect people from impaired safety and health when working with the unit. The applicable accident prevention regulations at the place of use apply in all cases.

Personnel have to wear personal protective equipment, about which specific mention is made in certain sections of this manual, during maintenance and troubleshooting work on and with the unit.

3 Technical data

3.1 Main dimensions of under-ceiling unit (dry cooling) one- and two-sided discharge (dimensions in mm (inch))

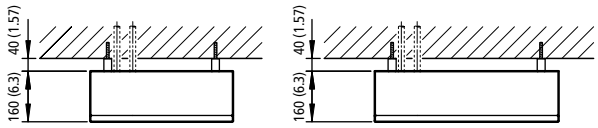

Front view Front view

Weights	
Connections, female thread Eurokonus, same end, connections on right	
Unit design	**Unit**
Weight	**[kg] (lb)**
one-sided discharge	32 (70.5)
two-sided discharge	42 (92.6)

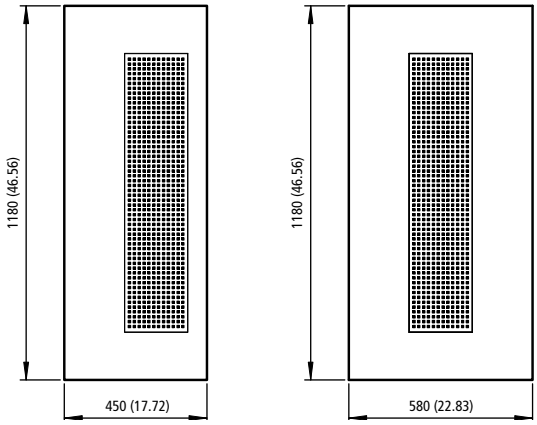

View from below View from below

Waterside connections

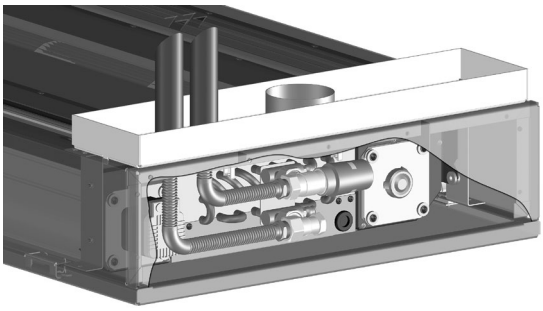

The cable openings are on the opposite side

Under-ceiling unit, one-sided discharge

Front view

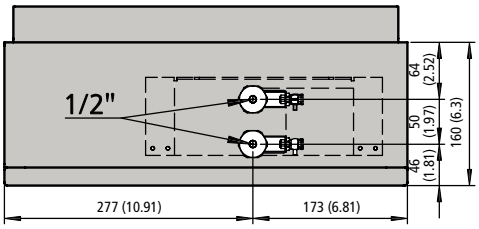

Plan view

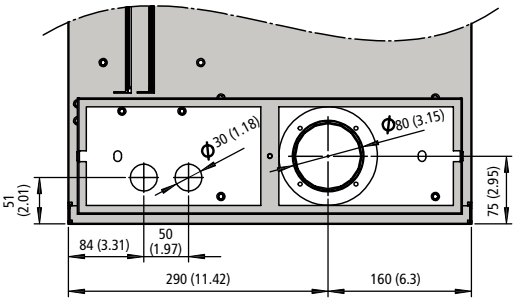

Under-ceiling unit, two-sided discharge

Front view

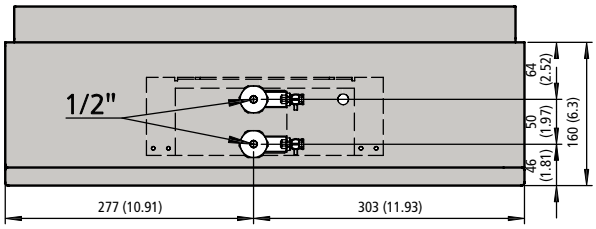

Plan view

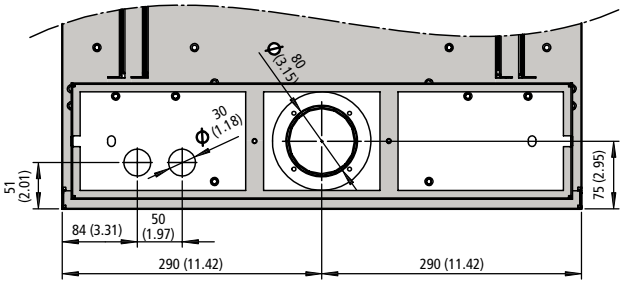

Genau mein Klima.

3.2 Main dimensions of suspended ceiling unit (dry cooling) one- and two-sided discharge (dimensions in mm (inch))

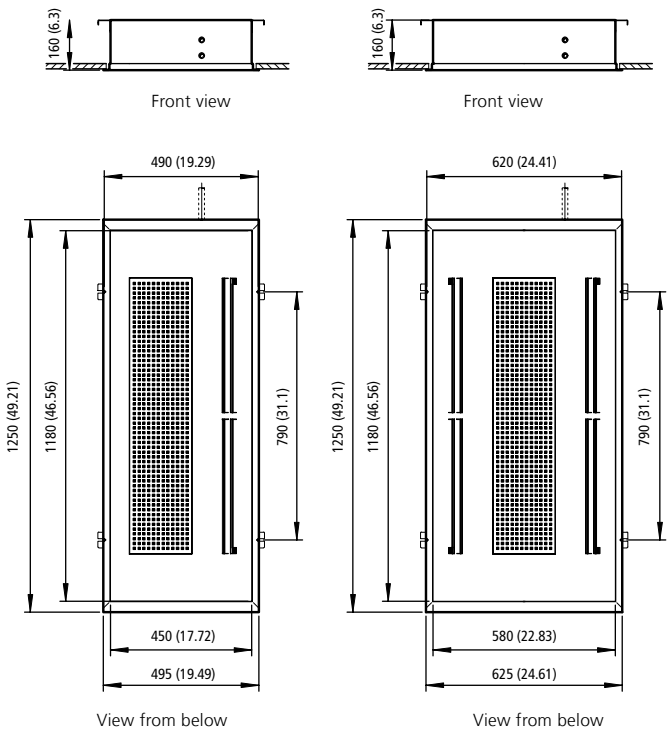

Weights	
Connections, female thread Eurokonus, same end, connections on right	
Unit design	**Unit**
Weight	**[kg] (lb)**
one-sided discharge	32 (70.5)
two-sided discharge	42 (92.6)

Waterside connections

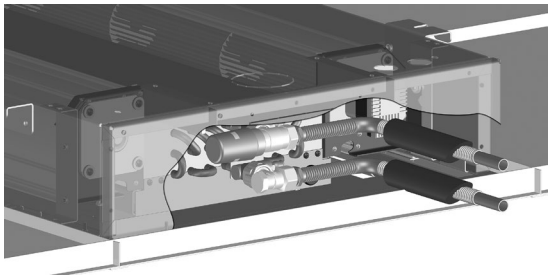

The cable openings are on the opposite side

Suspended ceiling unit, one-sided discharge

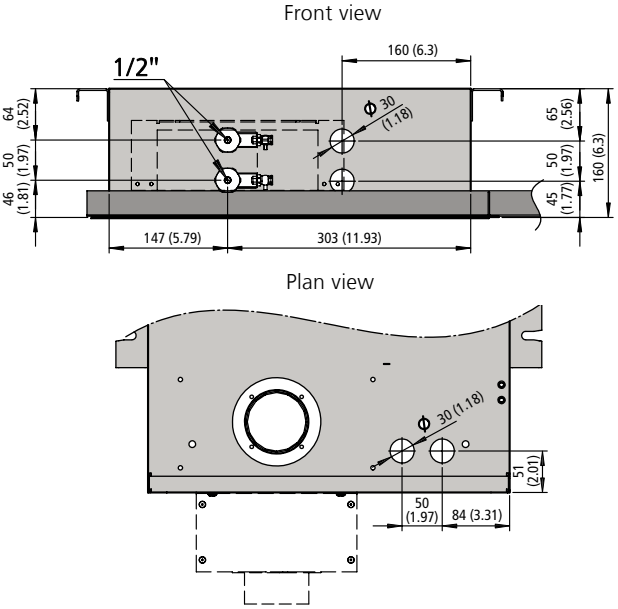

Suspended ceiling unit, two-sided discharge

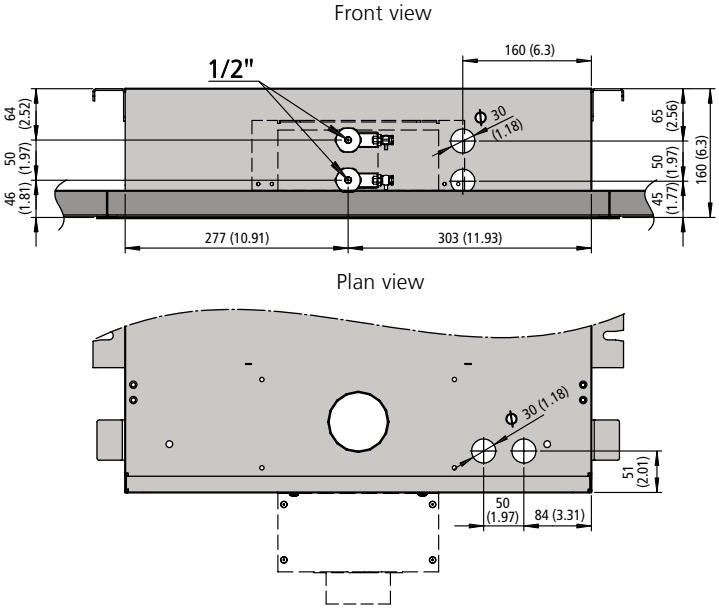

3.3 Main dimensions of under-ceiling unit (wet cooling) one- and two-sided discharge (dimensions in mm (inch))

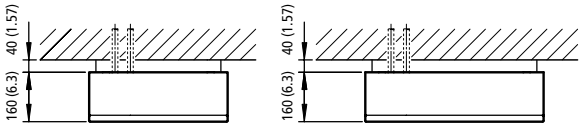

Front view Front view

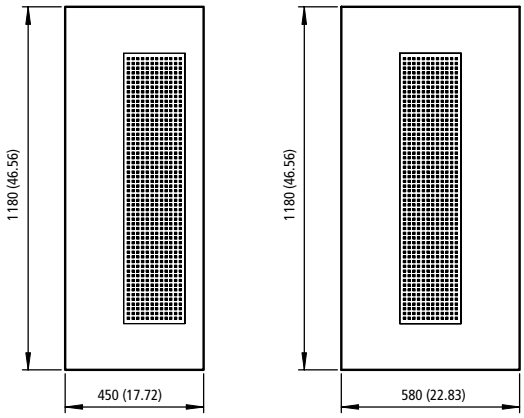

View from below View from below

Weights	
Connections, female thread Eurokonus, same end, connections on right	
Unit design	**Unit**
Weight	**[kg] (lb)**
one-sided discharge	32 (70.5)
two-sided discharge	42 (92.6)

Waterside connections

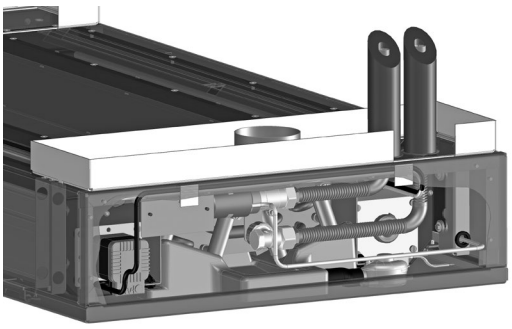

The cable openings are on the opposite side

Under-ceiling unit, one-sided discharge

Front view

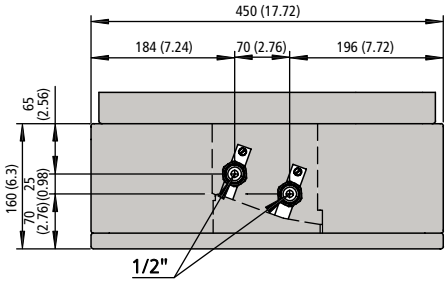

Plan view

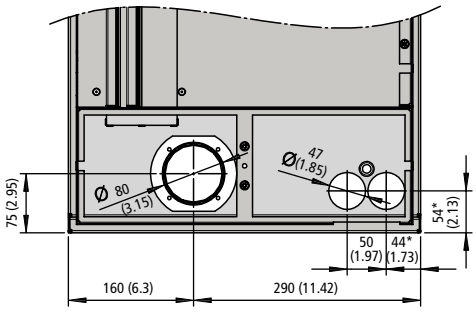

Under-ceiling unit, two-sided discharge

Front view

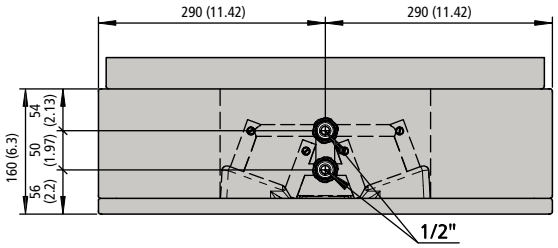

Plan view

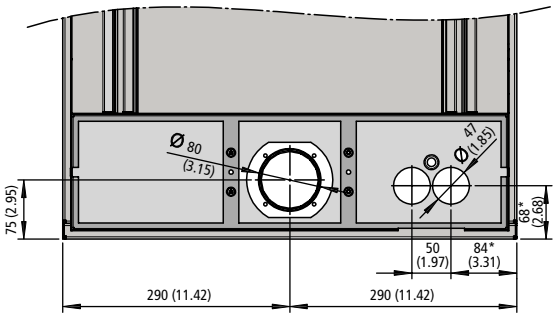

3.4 Main dimensions of suspended ceiling unit (wet cooling) one- and two-sided discharge (dimensions in mm (inch))

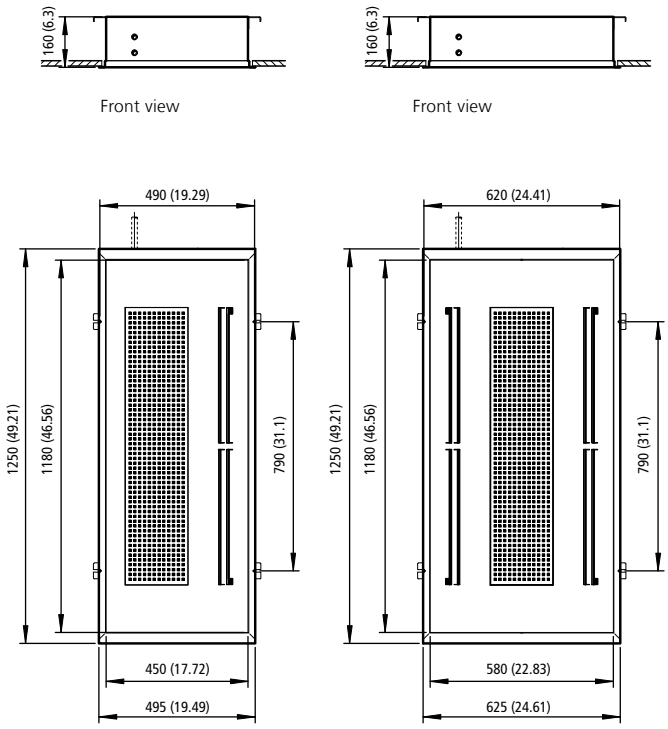

Weights	
Connections, female thread Eurokonus, same end, connections on right	
Unit design	**Unit**
Weight	**[kg] (lb)**
one-sided discharge	32 (70.5)
two-sided discharge	42 (92.6)

Waterside connections

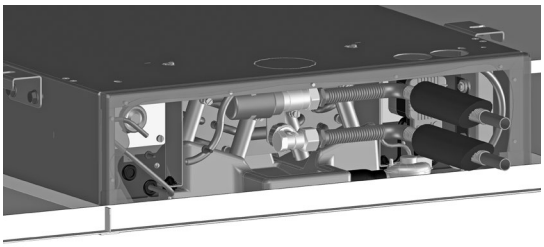

The cable openings are on the opposite side

Suspended ceiling unit, one-sided discharge

Front view

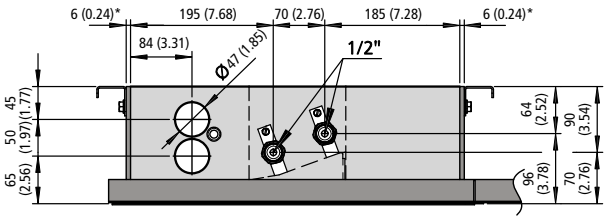

Plan view

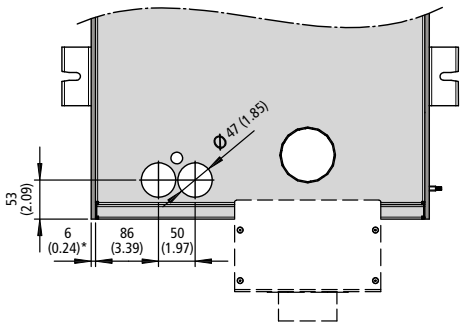

Suspended ceiling unit, two-sided discharge

Front view

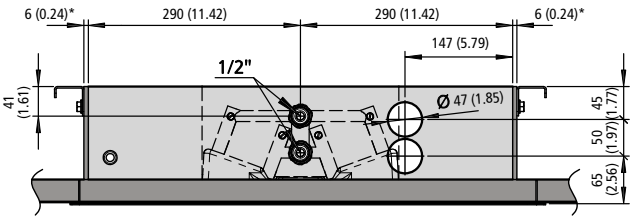

Plan view

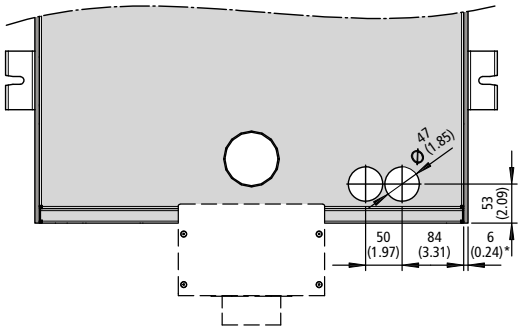

* 6 mm (0.24 in) Armaflex is bonded to all sides of the metal sleeve.
Total clearance dimension = dimension + 6 mm (0.24 in)

KAMPMANN
Genau mein Klima.

3.5 Operating data

Version: one-sided discharge for under-ceiling installation

One-sided discharge		Dry cooling model 1)					Wet cooling model 2)				
Speed range		Maximum	Medium5)			Minimum	Maximum	Medium5)			Minimum
Control voltage	[V]	10	8	6	4	2	10	8	6	4	2
Airflow	V[m³/h] (CFM)	337 (198)	278 (164)	221 (130)	163 (96)	106 (62)	196 (115)	157 (92)	119 (70)	81 (48)	42 (25)
Power consumption	P[W]	20	17	9	5	4	20	17	9	5	4
Speed	n [rpm]	1100	925	750	575	400	1100	925	750	575	400
Sound pressure level 4)	L_{WA}[dB(A)]	37	33	29	25	20	35	33	27	23	<20
Sound power level	L_{PA} [dB(A)]	45	41	37	33	28	43	41	35	31	<28
Cooling mode											
Cooling output	Q_k[W] (BTUh)	999 (3409)	837 (2856)	672 (2293)	498 (1699)	314 (1071)	1609 (5490)	1392 (4750)	1157 (3948)	891 (3040)	588 (2006)
Outlet air temperature	t_{L2}[°C] (°F)	17.6 (63.7)	17.3 (63.1)	17.1 (62.8)	16.8 (62.2)	16.5 (61.7)	12.4 (54.3)	11.9 (53.4)	11.2 (52.2)	10.5 (50.9)	9.4 (48.9)
Water volume	V[l/h] (gpm)	430 (1.89)	360 (1.59)	289 (1.27)	214 (0.94)	135 (0.59)	277 (1.21)	239 (1.05)	199 (0.88)	153 (0.67)	101 (0.44)
Pressure loss	dP [kPa] (ftH2O)	29 (9.7)	21.2 (7.09)	14.4 (4.82)	8.5 (2.84)	3.8 (1.27)	8 (2.68)	7 (2.34)	5 (1.67)	3 (1)	1.2 (4)
Heating mode 3)											
Heat output	Q_H[W] (BTUh)	4176 (14249)	3495 (11925)	2807 (9578)	2077 (7087)	1308 (4463)	2936 (10018)	2493 (8506)	2024 (6906)	1515 (5169)	961 (3279)
Water volume	V[l/h] (gpm)	223 (0.98)	188 (0.83)	152 (0.67)	113 (0.5)	72 (0.32)	154 (0.68)	132 (0.58)	107 (0.47)	81 (0.36)	52 (0.23)
Pressure loss	dP [kPa] (ftH2O)	7.7 (2.58)	5.7 (1.91)	3.9 (1.3)	2.3 (0.77)	2.31 (0.77)	3 (1)	2 (0.67)	1 (0.33)	1 (0.33)	1 (0.33)

Version: two-sided discharge for under-ceiling installation

One-sided discharge		Dry cooling model 1)					Wet cooling model 2)				
Speed range		Maximum	Medium5)			Minimum	Maximum	Medium5)			Minimum
Control voltage	[V]	10	8	6	4	2	10	8	6	4	2
Airflow	V[m³/h] (CFM)	635 (374)	525 (309)	418 (246)	308 (181)	199 (117)	369 (217)	297 (175)	225 (132)	152 (89)	79 (46)
Power consumption	P[W]	30	27	14	7	5	30	27	14	7	5
Speed	n [rpm]	1100	925	750	575	400	1100	925	750	575	400
Sound pressure level 4)	L_{WA}[dB(A)]	40	36	32	28	23	38	35	30	26	21
Sound power level	L_{PA} [dB(A)]	48	44	40	36	31	46	43	38	34	29
Cooling mode											
Cooling output	Q_k[W] (BTUh)	1718 (5862)	1465 (4999)	1203 (4105)	921 (3143)	607 (2071)	3114 (10625)	2650 (9042)	2153 (7346)	1598 (5453)	979 (3340)
Outlet air temperature	t_{L2}[°C] (°F)	18.6 (65.5)	18.3 (64.9)	17.9 (64.2)	17.5 (63.5)	17 (62.6)	11.2 (52.2)	10.6 (51.1)	10 (50)	9.3 (48.7)	8.4 (47.1)
Water volume	V[l/h] (gpm)	738 (3.25)	630 (2.77)	517 (2.28)	396 (1.74)	261 (1.15)	535 (2.36)	456 (2.01)	370 (1.63)	275 (1.21)	168 (0.74)
Pressure loss	dP [kPa] (ftH2O)	75.3 (25.19)	56.9 (19.04)	40.2 (13.45)	25.2 (8.43)	12.1 (4.05)	55 (18.4)	41 (13.72)	29 (9.7)	17 (5.69)	7 (2.34)
Heating mode 3)											
Heat output	Q_H[W] (BTUh)	7185 (24516)	6124 (20896)	5028 (17156)	3850 (13137)	2533 (8643)	5339 (18217)	4465 (15235)	3554 (12127)	2578 (8797)	1530 (5221)
Water volume	V[l/h] (gpm)	379 (1.67)	324 (1.43)	268 (1.18)	206 (0.91)	137 (0.6)	286 (1.26)	240 (1.06)	192 (0.85)	140 (0.62)	84 (0.37)
Pressure loss	dP [kPa] (ftH2O)	19.6 (6.56)	14.9 (4.98)	10.6 (3.55)	6.7 (2.24)	3.3 (1.1)	15 (5.02)	10 (3.35)	7 (2.34)	4 (1.34)	2 (0.67)

1) with LPHW 16 / 18 °C (60.8 / 64.4 °F), t_{L1} = 27 °C (80.6 °F)
2) with CHW 7 / 12 °C (44.6 / 53.6 °F) and t_{L1} = 27 °C (80.6 °F), 48% relative humidity
3) with LPHW 75 / 65 °C (167 / 149 °F), t_{L1} = 20°C (68 °F)
4) The sound pressure levels were calculated with an assumed room insulation of 8 dB(A).
This corresponds to a distance of 2 m (6.56 ft), a room volume of 100 m³ (3531.5 cft) and a reverberation time of 0.5 s (in accordance with VDI 2081)
5) Recommended speed range of fans for optimum energy efficiency and comfort

Version: one-sided discharge for suspended ceiling installation

One-sided discharge		Dry cooling model 1)					Wet cooling model 2)				
Speed range		**Maximum**	**Medium5)**			**Minimum**	**Maximum**	**Medium5)**			**Minimum**
Control voltage	**[V]**	**10**	**8**	**6**	**4**	**2**	**10**	**8**	**6**	**4**	**2**
Airflow	V[m³/h] (CFM)	299 (176)	247 (145)	197 (116)	145 (85)	94 (55)	196 (115)	157 (92)	119 (70)	81 (48)	42 (25)
Power consumption	P[W]	20	17	9	5	4	20	17	9	5	4
Speed	n [rpm]	1100	925	750	575	400	1100	925	750	575	400
Sound pressure level 4)	L_{WA}[dB(A)]	37	33	29	25	20	35	33	27	23	<20
Sound power level	L_{PA} [dB(A)]	45	41	37	33	28	43	41	35	31	<28
Cooling mode											
Cooling output	Q_k[W] (BTUh)	896 (3057)	748 (2552)	599 (2044)	441 (1505)	275 (938)	1570 (5357)	1360 (4641)	1133 (3866)	874 (3866)	579 (1976)
Outlet air temperature	t_{L2}[°C] (°F)	17.4 (63.3)	17.2 (63)	17 (62.6)	16.7 (62.1)	16.4 (61.5)	12.7 (54.9)	12.2 (54)	11.5 (52.7)	10.7 (51.3)	9.6 (49.3)
Water volume	V[l/h] (gpm)	385 (1.7)	322 (1.42)	258 (1.14)	190 (0.84)	118 (0.52)	270 (1.19)	234 (1.03)	195 (0.86)	150 (0.66)	100 (0.44)
Pressure loss	dP [kPa] (ftH2O)	23.9 (8)	17.4 (5.82)	11.8 (3.95)	6.9 (2.31)	3 (1)	8 (2.68)	6 (2)	5.3 (1.77)	3.3 (1.1)	1 (0.33)
Heating mode 3)											
Heat output	Q_H[W] (BTUh)	3744 (12775)	3125 (10663)	2501 (8534)	1841 (6282)	1146 (3910)	2876 (9813)	2442 (8332)	1986 (6777)	1492 (5091)	950 (3242)
Water volume	V[l/h] (gpm)	201 (0.88)	168 (0.74)	135 (0.59)	100 (0.44)	63 (0.28)	151 (0.66)	129 (0.57)	105 (0.46)	80 (0.35)	51 (0.22)
Pressure loss	dP [kPa] (ftH2O)	6.4 (2.14)	4.7 (1.57)	3.2 (1.07)	1.9 (0.64)	1 (0.33)	2.7 (0.9)	2 (0.67)	1.4 (0.47)	1 (0.33)	1 (0.33)

Version: two-sided discharge for suspended ceiling installation

One-sided discharge		Dry cooling model 1)					Wet cooling model 2)				
Speed range		**Maximum**	**Medium5)**			**Minimum**	**Maximum**	**Medium5)**			**Minimum**
Control voltage	**[V]**	**10**	**8**	**6**	**4**	**2**	**10**	**8**	**6**	**4**	**2**
Airflow	V[m³/h] (CFM)	565 (333)	467 (275)	371 (218)	274 (161)	177 (104)	369 (217)	297 (175)	225 (132)	152 (89)	79 (46)
Power consumption	P[W]	30	27	14	7	5	30	27	14	7	5
Speed	n [rpm]	1100	925	750	575	400	1100	925	750	575	400
Sound pressure level 4)	L_{WA}[dB(A)]	40	36	32	28	23	38	35	30	26	21
Sound power level	L_{PA} [dB(A)]	48	44	40	36	31	46	43	38	34	29
Cooling mode											
Cooling output	Q_k[W] (BTUh)	1558 (5316)	1325 (4521)	1092 (3726)	825 (2815)	540 (1843)	3050 (10407)	2598 (8865)	2116 (7220)	1575 (5374)	968 (3303)
Outlet air temperature	t_{L2}[°C] (°F)	18.4 (65.1)	18.1 (64.6)	17.7 (63.9)	17.3 (63.1)	16.9 (62.4)	11.4 (52.5)	10.9 (51.6)	10.3 (50.5)	9.5 (49.1)	8.5 (47.3)
Water volume	V[l/h] (gpm)	670 (2.95)	569 (2.51)	469 (2.06)	355 (1.56)	232 (1.02)	524 (2.31)	447 (1.97)	364 (1.6)	271 (1.19)	166 (0.73)
Pressure loss	dP [kPa] (ftH2O)	63.4 (21.21)	47.6 (15.93)	33.9 (11.34)	20.7 (6.93)	9.8 (3.28)	53 (17.73)	40 (13.38)	28 (9.37)	16 (5.35)	7.4 (2.48)
Heating mode 3)											
Heat output	Q_H[W] (BTUh)	6514 (22227)	5537 (18893)	4562 (15566)	3447 (11762)	2253 (7688)	5247 (17904)	4391 (14983)	3503 (11953)	2550 (8701)	1519 (5183)
Water volume	V[l/h] (gpm)	344 (1.51)	294 (1.29)	244 (1.07)	185 (0.81)	122 (0.54)	280 (1.23)	236 (1.04)	189 (0.83)	138 (0.61)	83 (0.37)
Pressure loss	dP [kPa] (ftH2O)	16.6 (5.55)	12.5 (4.18)	9 (3.01)	5.6 (1.87)	2.7 (0.9)	14 (4.68)	10 (3.35)	7 (2.34)	4.4 (1.47)	1.8 (0.6)

1) with LPHW 16 / 18 °C (60.8 / 64.4 °F), t_{L1} = 27 °C (80.6 °F)
2) with CHW 7 / 12 °C (44.6 / 53.6 °F) and t_{L1} = 27 °C (80.6 °F), 48% relative humidity
3) with LPHW 75 / 65 °C (167 / 149 °F), t_{L1} = 20°C (68 °F)
4) The sound pressure levels were calculated with an assumed room insulation of 8 dB(A).
This corresponds to a distance of 2 m (6.56 ft), a room volume of 100 m³ (3531.5 cft) and a reverberation time of 0.5 s (in accordance with VDI 2081)
5) Recommended speed range of fans for optimum energy efficiency and comfort

4 Construction and function

4.1 Overview

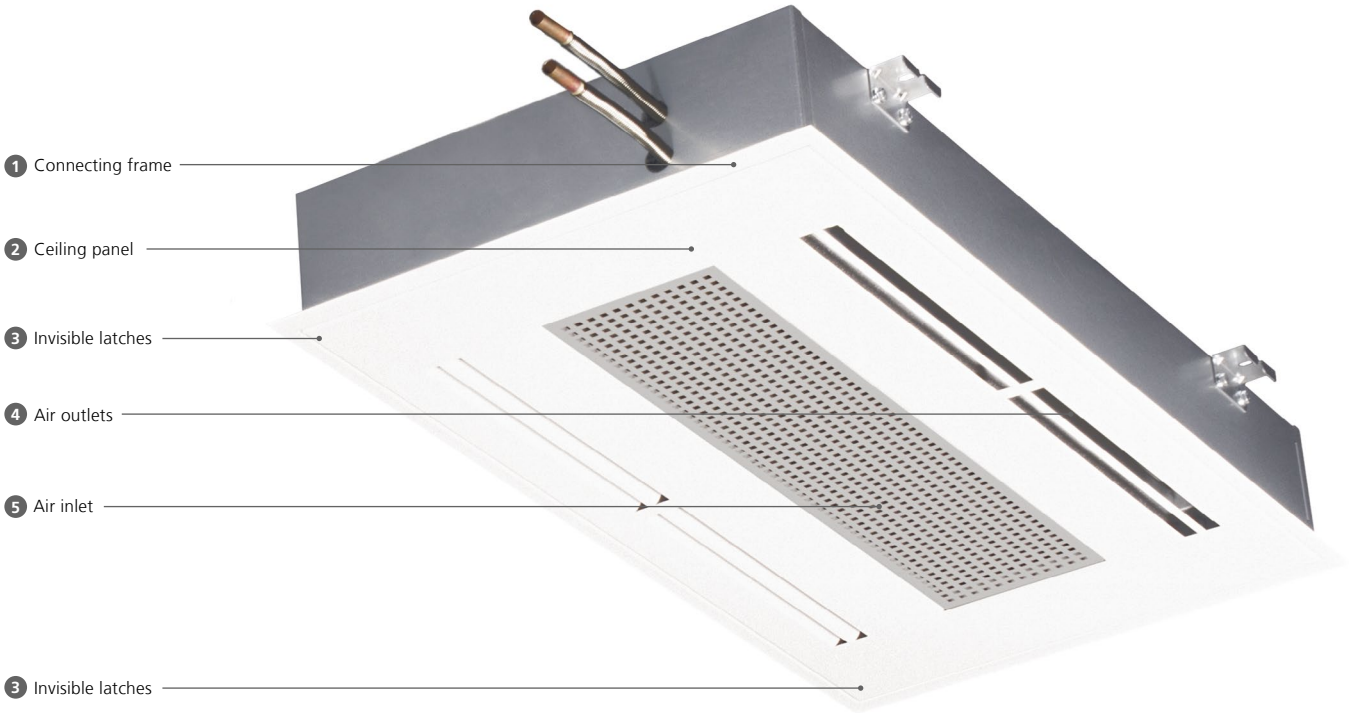

Features

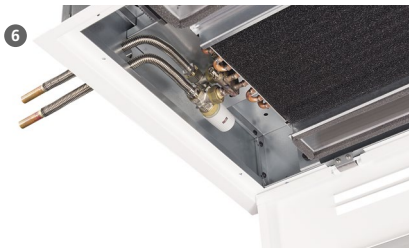

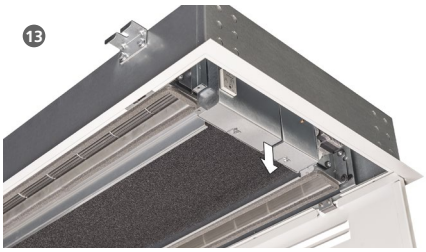

3.26 KaDeck

Versatile air conditioning for offices and administration buildings

Installation and operating instructions

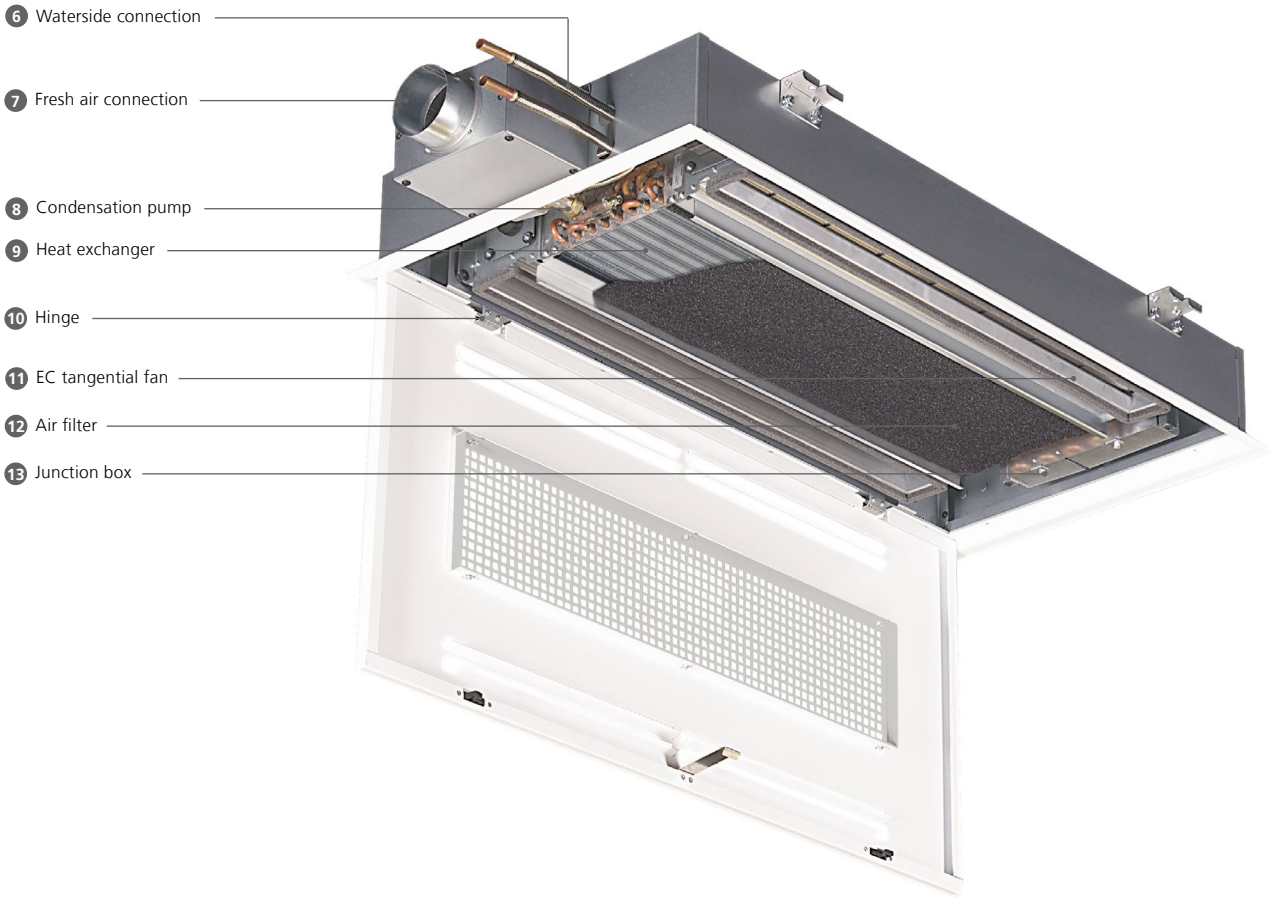

1 **Connecting frame:**
- the suspended ceiling models have a frame on all sides, which connects the KaDeck to the suspended ceiling

2 **Ceiling panel:**
- RAL 9010 powder coated, RAL 9003 air intake grille
- other colours are optionally possible on request

3 **Invisible latch:**
- complies with the industry standard for a virtually unlimited service life without disturbing the design

4 **Air outlets:**
- depending on the model, the air outlets are ideally positioned to maximise the Coanda effect and minimise draughts

5 **Air inlet:**
- large air inlet grille with large free cross-section

6 **Waterside connection:**
- the waterside (and electrical) connections are arranged so that no further service hatches are needed on site

7 **Fresh air connection:**
- all models have possible fresh air supply from above
- the suspended ceiling model also offers the option of a side connection through the optional primary air nozzle

8 **Condensation pump:**
- quiet condensation pump with alarm contact on the wet cooling model

9 **Heat exchanger:**
- optimised for dry or wet cooling for maximum performance with a 2-pipe system

10 **Condensation pump and float switch:**
- extremely robust design
- invisible from outside
- enables simple and frequent maintenance without damage
- if required, the cover panel can be fully and simply removed

11 **EC tangential fan:**
- with continuous EC energy-saving technology
- motor monitoring with internal fault processing
- optimised flow for minimum noise

12 **Air filter:**
- optional air filter for purifying ambient air and to protect the heat exchanger

13 **Electrical wiring:**
- can be lowered for wiring or maintenance purposes
- optimum accessibility

KAMPMANN
Genau mein Klima.

4.2 Brief description

The KaDeck is a decentralised unit for heating, cooling and filtering air, including in hotels, offices and business premises. Thanks to the efficient, extremely quiet fan, the individual comfort temperature is quickly reached.

Operating mode

Secondary air is drawn into the central part of the ceiling panel. The air is routed first through the air intake grille to the optional filter, which removes dust from the secondary air, protecting the downstream components from dirt.

The air is drawn in by the fan, located directly downstream of the filter and passes through the copper-aluminium heat exchanger. Depending on the temperature at which the medium flows through the heat exchanger, the air is either cooled or heated in the exchanger.

The air then passes through the outlet air slats into the room.

Condensation can be produced at the heat exchanger when cooling with low water temperatures. Two different versions of the KaDeck are available. Should the water temperature lie below the dew point, the “wet cooling” version with condensation tray and pump must be installed.

If the temperatures lie above the dew point, the “dry cooling” version can be selected. An on-site monitoring system should be installed to prevent the temperature from falling below the dew point.

4.3 Accessories

Figure	Article	Properties	Suitable for	Art. no.
	Valves/Return shut-off valves			
	Valve body	angled, ½" connection	all models	**194000100970**
		angled, ½" connection, pre-settable		**194000346910**
	Adjustment key	pre-settable		**194000346915**
	Return shut-off valve	angled, ½" connection		**194000155953**
	Other			
	Fresh air connection fitting	for the connection of primary air	suspended ceiling units	**326007010103**
	Air filter	for installation in the air intake area	all models	**326007010002**
	Valve actuators			
	Thermoelectric actuator	120 V, NC	all models	**000001333648**

5 Transport, packaging and storage

5.1 Safety information for transport

Risk of injury

WARNING!

Risk of injury from sharp edges or broken transport elements!

Improper use of parts of the unit to carry the equipment can lead to personal injury and material damage.

- 2 people are needed to transport the unit.
- Wear personal protective clothing when transporting the unit.
- Only lift the unit on both sides and only by the basic unit (not by the valves).
- Use suitable transport equipment to transport the unit to prevent damage to health and the equipment.

Incorrect transport

IMPORTANT NOTE!

Material damage caused by incorrect transport!

Units being transported can drop or topple over if transported wrongly. This can cause serious material damage.

- Proceed carefully when unloading the equipment on delivery and when transporting it on site and note the symbols and instructions on the packaging.
- Only use the holding points provided.
- Only attach lifting equipment to the unit. Ensure that the weight is evenly distributed.
- Only remove packaging shortly before assembling the unit

5.2 Packing units

Scope of delivery

The size of the packaging is based on the unit supplied:			
	L	W	H
	[mm] (in)	[mm] (in)	[mm] (in)
KaDeck for under-ceiling installation, one-sided discharge	1383 (54.4)	445 (17.5)	200 (7.9)
KaDeck for under-ceiling installation, two-sided discharge	1383 (54.4)	575 (22.6)	200 (7.9)
KaDeck for suspended ceiling installation, one-sided discharge	1453 (57.2)	500 (19.7)	160 (6.3)
KaDeck for suspended ceiling installation, two-sided discharge	1453 (57.2)	630 (24.8)	160 (6.3)

5.3 Transport inspection

Check on delivery for completeness and transport damage.

Proceed as follows in the event of visible damage:

- Do not accept delivery or only accept with reservations. Record any transport damage on the transportation documents or on the transport company's delivery note.
- Lodge a complaint with the freight forwarder.

Lodge a complaint about all defects and faults as soon as they are detected. Claims for damages can only be made within the applicable period for complaints.

5.4 Packaging

Packaging information

The individual items are packaged in accordance with the transport conditions expected.

The packaging is intended to protect the individual components from damage during transit, corrosion and other damage before they are assembled. Therefore do not destroy the packaging and only remove shortly before installation.

Handling packaging materials

Dispose of packaging materials in line with the applicable statutory requirements and local regulations.

IMPORTANT NOTE!

Environmental hazard from incorrect disposal!

Packaging materials are valuable raw materials and, in many cases, can be reused or sensibly reconditioned and reused. Incorrect disposal of packaging materials can present a hazard to the environment.

- Dispose of packaging materials in an environmentally-friendly manner.
- Note the locally applicable regulations governing disposal. You may wish to consider contracting a specialist company to dispose of the materials.

5.5 Storage

Storing packaging

Store packaging under the following conditions:

- Do not store outdoors.
- Store in a dry and dust-free place.
- Do not expose to aggressive media.
- Protect from direct sunlight.
- Avoid mechanical vibrations and shocks.
- Storage temperature: 15 to 35°C (59 to 95 °F).
- Relative air humidity: max. 60%.

Under certain circumstances, packages can carry storage instructions that go beyond the requirements listed here. Comply with these instructions accordingly.

6 Installation and connection

6.1 Requirements governing the installation site

Only install and assemble the unit if the following conditions are met:

- The installation site can bear the weight of the unit (*Chapter 3 "Technical data" on page 11 ff).*
- The load-proof and vibration-free position of the unit is guaranteed (possibly call in the services of an architect or structural engineer, also in connection with openings to be made through walls and ceilings).
- Comply with the minimum clearances from the unit to the wall/ceiling/floor (see page 24). If nothing is specified, there is no minimum clearance (given that a free air flow is ensured).
- Ensure that the airflow can circulate freely. Leave at least 1.5 m (59") of free space for air inlets and outlets.
- Make sure that drilling positions for installing the unit are free from electrical wiring or pipes.
- Provide for adequate space for floor and return water connections on site.
- There shall be an adequate safeguard against the risk of excessive pressure in the water network.
- Ensure that the unit can be installed without mechanical torsion or tension when installed.
- There is a power supply on site.

6.2 Selection of the installation site

Throws of under-ceiling unit

Wall-sided arrangement

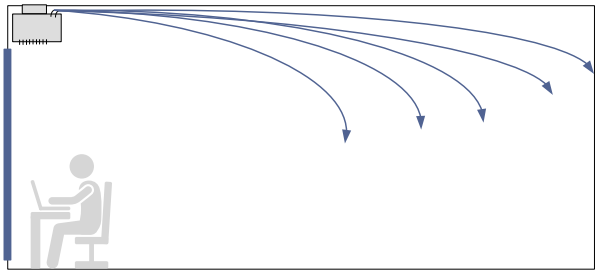

Room-centre arrangement

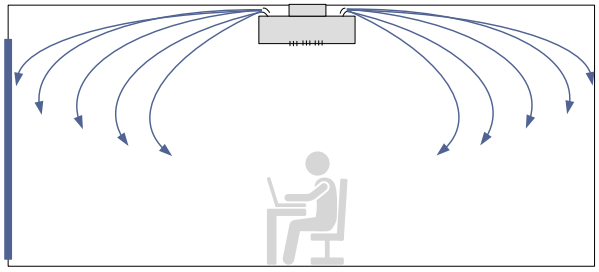

Dry cooling details: 16/18 °C (60.8/64.4 °F) Room temperature 27 °C (80.6 °F)

Throws of suspended ceiling unit

Wall-sided arrangement

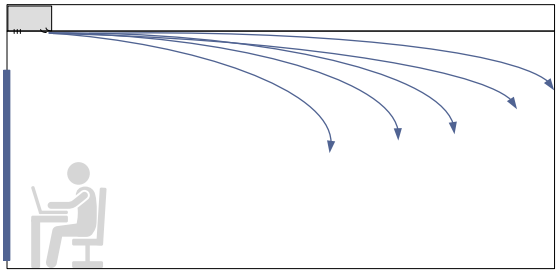

Room-centre arrangement

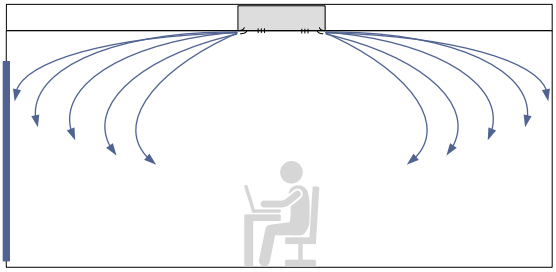

The unit is selected and positioned based on the circumstances on site:

Is there a suspended ceiling?	Type of unit
Yes	Suspended unit
No	Under-ceiling unit

Depending on the shape of the room, lighting, ceiling level etc., you can choose between units with 1-sided or 2-sided discharge.

Note the following when positioning the unit:

Air discharge direction
Position the air outlet to avoid the creation of draughts.
The throw diagrams can help with this.
Select and position the unit taking into account where people will be standing and sitting.
If the distance from the wall to the air outlet is less than 3 metres (9.84 ft), this can produce draughts at higher fan speeds. Make sure that the air always flows lengthways along the space.

Choice of the installation site:
Maximum installation height 3.5 m (11.48 ft). Minimum installation height 2.5 m (8.2 ft).
(the maximum room height can be significantly lower, depending on the room shape, type of ceiling, use of the room and system temperatures, with under-ceiling units that are also used for heating!)

Avoid:
- Impairing the free circulation of air with lamps, furniture etc.
- Obstacles to air distribution and air intake.
- Electronic appliances below the KaDeck.

6.3. Suspending the unit

Important: 2 people are needed to suspend the unit due to heavy loads!

Drill positions for under-ceiling unit (dry cooling), one-sided discharge

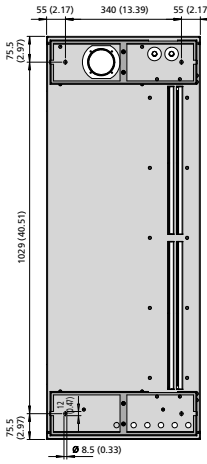

Drill positions for under-ceiling unit (dry cooling), two-sided discharge

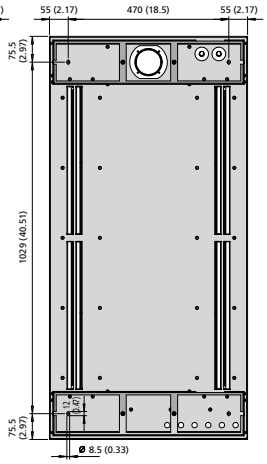

Under-ceiling units
(model wet cooling)

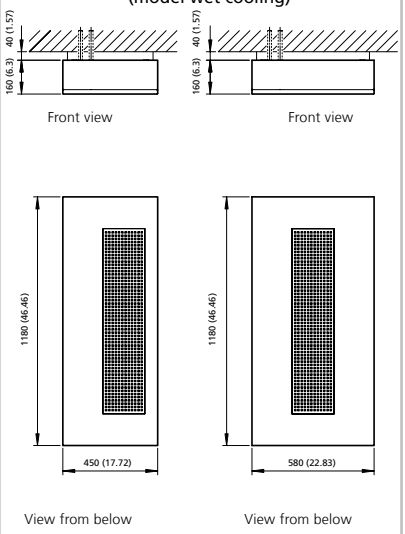

Suspended ceiling units
(model dry cooling)

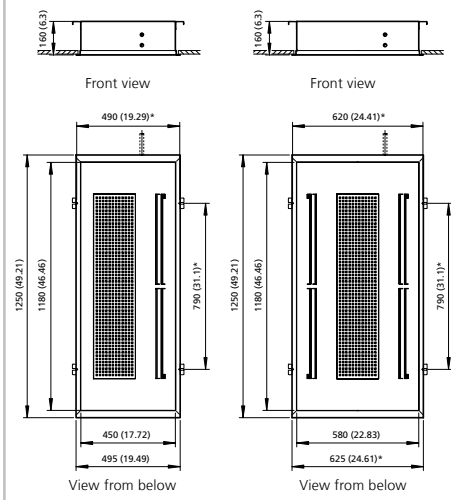

* Dimensions for drilling positions with suspended ceiling installation

Drill positions for under-ceiling unit (wet cooling), one-sided discharge

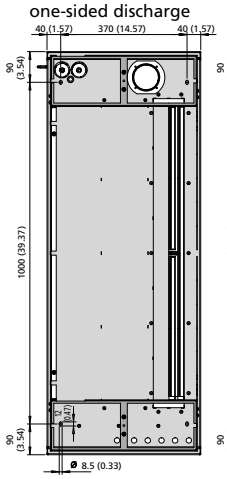

Drill positions for under-ceiling unit (wet cooling), two-sided discharge

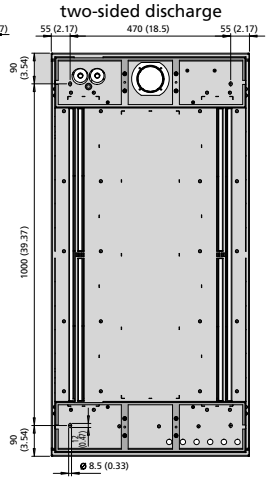

Drilling positions with under-ceiling installation

Under-ceiling installation

Drill the holes for the fixing dowels into the concrete ceiling slab. Then fix the dowels and threaded rods in place.

- Mark the drill positions on the ceiling (refer to the diagrams on the left "Drill positions for under-ceiling installation – dry or wet cooling")
- Drill, position the threaded rods, fit the nuts and washers.
- Fit connection panels as per the diagram (with 1-sided discharge, the separating plate (bracket) supplied must be fitted between the connecting panels)
- Suspend the unit, tighten and lock the nuts.
- Connect up the heating and electrics.
- Connect the condensation side. (Wet cooling model)
- Fit and connect the primary air spigot. (Wet cooling model)

Installation within a suspended ceiling

With ceiling structures with inlay panels, they are largely removed around the KaDeck.

With a rigid plasterboard ceiling, a corresponding cut-out is produced with the adjacent dimensions.

- Fit the suspension brackets on the KaDeck.
- Mark the drill positions on the ceiling (one-sided: 490 mm (19.29 in) x 1050 mm (41.34 in) / two-sided: 620 mm (24.41 in) x 105 mm (4.13 in)).
- Drill, position the threaded rods, fit the nuts and washers.
- Suspend the unit so that the frame of the unit is positioned just under the suspended ceiling.
- Adjust the unit into the correct position and lock in place by tightening the nuts upwards.
- Connect up the heating and electrics.
- Connect the condensation side. (Wet cooling model).
- Fit and connect the primary air spigot. (Wet cooling model).

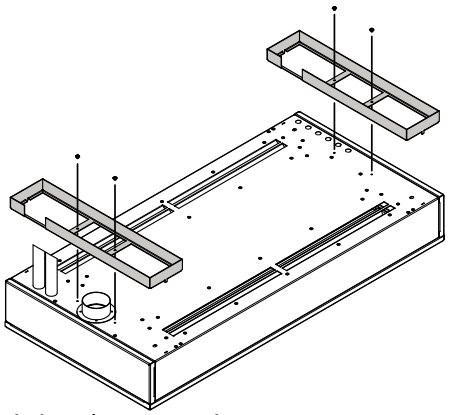

Fitting the connection covers

6.4 Wet and dry cooling model

Distinction

A distinction is made between two basic models of KaDeck – dry and wet cooling.

Never connect dry cooling units to an on-site water system in which the temperature could fall below the dew point!

The following table provides an overview of the equipment on the KaDeck units depending on the model.

KaDeck	Dry cooling	Wet cooling
Heat exchanger optimised for dry cooling mode	yes	no
Heat exchanger optimised for wet cooling mode	no	yes
Condensation tray	no	yes
Condensation pump	no	yes
Housing vapour-tightly insulated against condensation	no	yes

6.5 Water connection with wet cooling

We recommend using Kampmann-side accessories to provide the heat exchanger connections with the valves and on-site pipework. Coordinate valves, hoses etc. to the available space and requirements of the KaDeck.

Remove the condensation tray to connect up the water connection. First check whether there is water in the tray or the pipework. Dismantle the tray, as described under section 8.3.3.

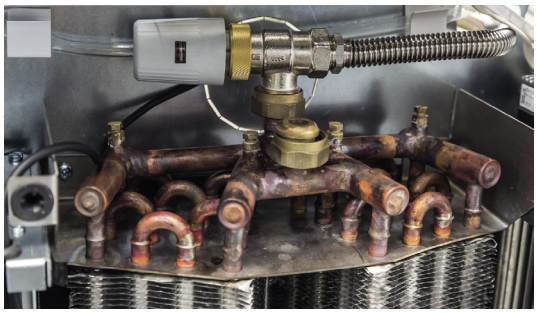

First fit the flexible hose to the angle valve (including sealing work) and then the angle valve to the KaDeck. Screw the thermostat valve and the return shut-off valve using an appropriate sealant (e.g. NEO Fermit) to the Eurokonus connections on the convector.
Now the actuator can be fitted and the cable routed to the electrical connection area. Use the clamps on the fan for this purpose.

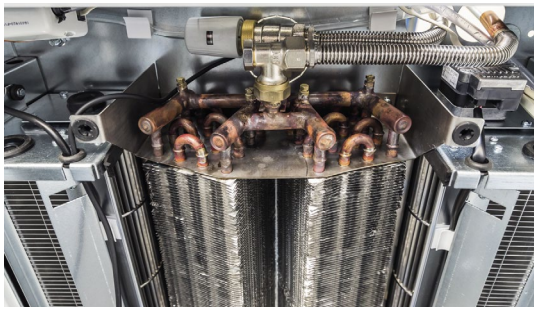

Now fit the components for the return in the same order and route the flexible connections to the required outlet on the unit. Connect up the on-site water network and insulate the pipes and flexible hoses as far as the valve. Use vapour-impermeable insulation for this. Make sure that any condensation that forms drips from the pipework and the insulation into the condensation tray.

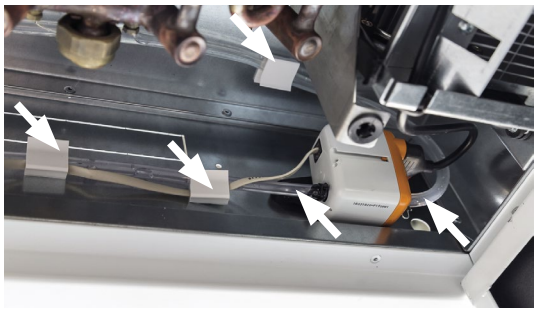

Check whether the hoses have been damaged or bent by the work and are still in the fixing clamps before fitting the tray.

Insert the condensation tray into the fixings provided for this purpose and check whether the tray is fitted horizontally.

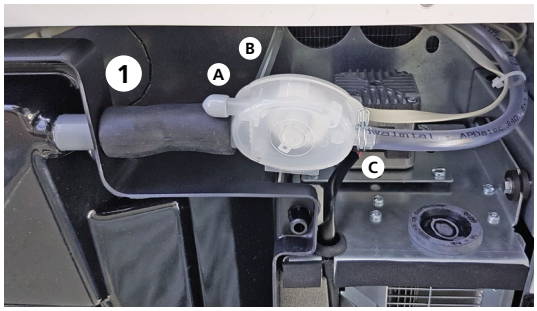

❶ Tighten the nut and check that the hose clamp is sitting correctly.
Attach the condensation pump.
❸ Check whether the plug Ⓐ, the hose Ⓑ, and the air vent Ⓒ are fitted and sufficiently tightened.

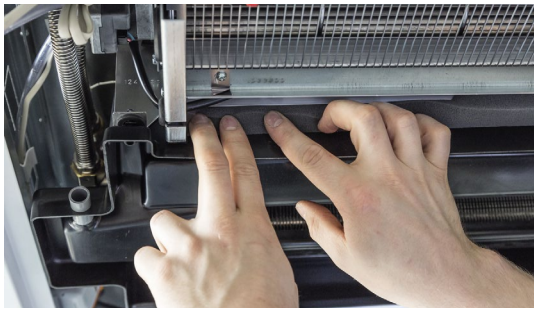

Check whether the foam tape provides a seal between the fan and fan unit. It may be necessary to press it into place a little.

!

IMPORTANT NOTE!
Check the condensation drain and check that the fault alert is switched off each time the unit is assembled or dismantled!

Condensation drain

The wet cooling model of the KaDeck includes a built-in condensation pump with float switch to drain away any condensation formed. The maximum delivery height of the pump is 6 m (19.69 ft). The condensation that is produced from the condensation pump hose has to be drained from the unit along a 2% gradient. The condensation has to be collected in a pool pump on site if it has to be drained higher than the integrated pump allows.

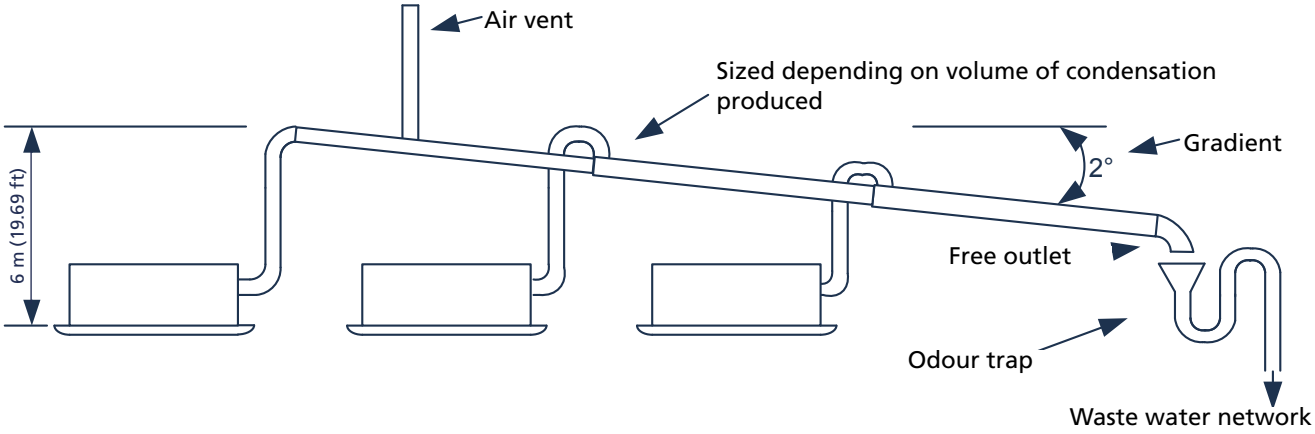

A ventilation valve (see photo) is fitted on the pump's condensation hose. The on-site condensation connection can be connected here. The diameter of the hose is 6 mm (0.24 in). Secure the hose with a hose clamp.

Refer the the diagram below for installation to ensure that correct and long-lasting operation of the pump.

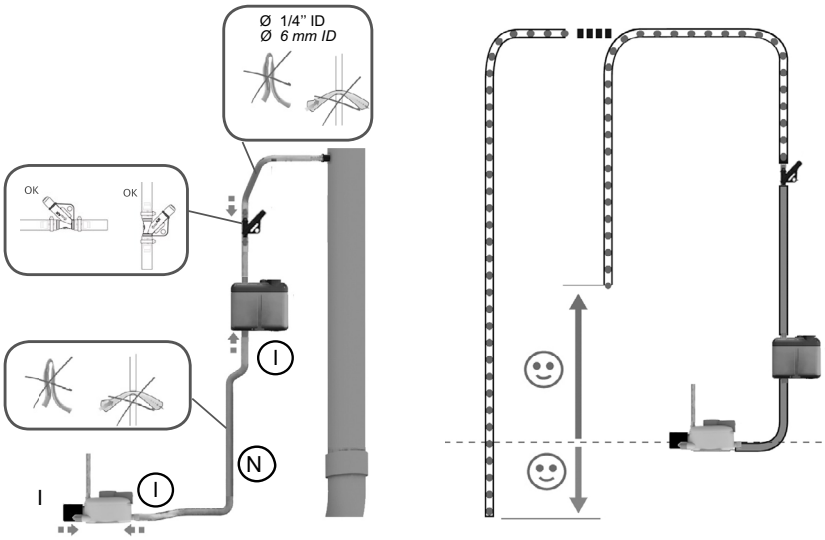

KAMPMANN
Genau mein Klima.

6.6 External fresh air supply

Primary air spigots for the fresh air supply

The ceiling cassettes can be fitted with a primary air spigot, which permits pre-conditioned fresh air to be supplied to the air conditioning unit and thus also into the room. The conditioned fresh air needs to be cleaned and supplied at a minimum of 14°C (57.2 °F) and a maximum of 22°C (71.6 °F) in cooling mode.

The connection can be made on all units from above via an on-site 80 mm (3.15 in) flange. The punched opening is simply removed on the top of the unit.

Connection at the side is also possible on suspended ceiling units. Use the accessories for the primary air spigot for this. An 80 mm (3.15 in) pipe connection is needed for this on site.

Maximum airflow per unit
KaDeck 1-sided air discharge: 50 m³/h (29.43 cfm)
KaDeck 2-sided air discharge: 80 m³/h (47.09 cfm)

Fitting position of primary air connection
Remove both rubber seals on the fan with wet cooling models with 2-sided discharge. (See diagram below)

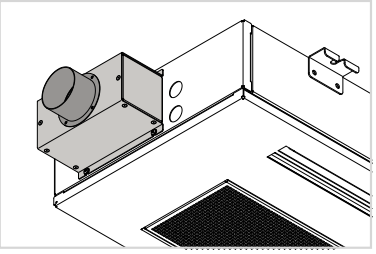

Primary air spigot
(suspended ceiling model)

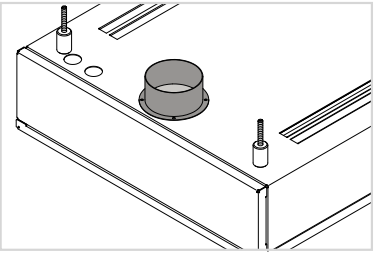

Primary air spigot
(top side of unit)

Pressure losses at primary air connection

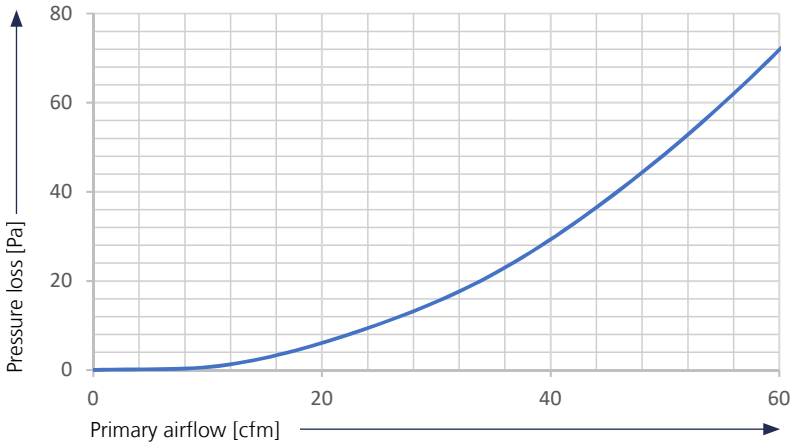

6.7 Electrical wiring

Personnel:
- Installation personnel
- Qualified electrician

Protective equipment:
- Safety shoes
- Protective gloves
- Workwear

Only allow qualified electricians to perform electrical work.
Further connections, for instance to building control systems or external controllers, may be necessary. Refer to the manufacturer's literature in this respect.

- Wire the unit in accordance with the enclosed wiring diagram and the national wiring regulations (NEC).
- Only connect the unit to fixed cables.

Applications
KaDeck units are solely intended for use indoors (e.g. residential and commercial properties, showrooms etc.).
They are not suitable for use in humid environments, such as swimming pools or outdoors.
Protect the products from any moisture during installation.
Check the application with the manufacturer in case of any doubt.
Any use other than the use specified above is deemed not to be correct and proper.
The operator of the unit is solely responsible for any damage arising as a result of this. Intended use is deemed to include compliance with the installation instructions described in these instructions.

IMPORTANT NOTE!
Non-compliance with the regulations and operating instructions can result in the units malfunctioning with consequential damage and danger to people.

There is a danger of fatal injury caused by wires being swapped due to incorrect wiring! Disconnect all parts of the system from the mains power supply and prevent them from being reconnected before starting any connection and maintenance work!

Please read these instructions in full to ensure correct and proper installation and the correct operation of the unit.

Please note the following safety-relevant information:

- Disconnect all parts of the system that are being worked on.
- Ensure that the system cannot be accidentally re-connected!
- Before commencing installation/maintenance work, wait until the fan has come to a standstill after the unit has been switched off.
- Caution! Pipes, casings and fittings can become very hot or very cold depending on the operating mode!
- Qualified personnel must have undergone training to provide them with adequate knowledge of the following:
  - Safety and accident prevention regulations
  - Guidelines and recognised national technical regulations, i.e. (NEC/NFPA 70)
  - ANSI standards
  - Technical wiring regulations issued by the regional electricity providers

Protect the products from any moisture during installation. Check the application with the manufacturer in case of any doubt.

Any use other than the use specified above is deemed not to be correct and proper. The operator of the unit is solely responsible for any damage arising as a result of this. Intended use is deemed to include observing the installation instructions described in these instructions.

Modifications to the unit
Do not undertake any modifications or upgrades on the unit without discussing them with the manufacturer as they can impair the safety and operation of the unit.
Do not carry out any measures on the unit not described in this manual. Make sure that on-site systems and cabling are suitable for connection to the intended system!

Important:
Provide an all-pole mains separator in the wiring on site that can be reliably secured to avoid the system being reconnected (e.g. a lockable switch with a contact opening of at least 3 mm (0.12 in) up to a rated voltage of 480 V).
No protective measures are indicated in the Kampmann wiring diagrams. These must be provided additionally when installing the system and when connecting the units in accordance with the NFPA 70 and the regulations of each of the respective energy supply companies.

6.8 Overview of controls

The unit comes in a series of different electrical versions. Connect it via a terminal strip in the electrical junction box, which is located on the opposite side of the unit's water connection.
Wire the unit as per the wiring diagram, which is different for each version.

Design	Art. no. suffix
Electromechanical model	_US

Example:
326026211211US
-> Dry cooling electromechanical model without dew point monitor

6.9 120 V electromechanical model

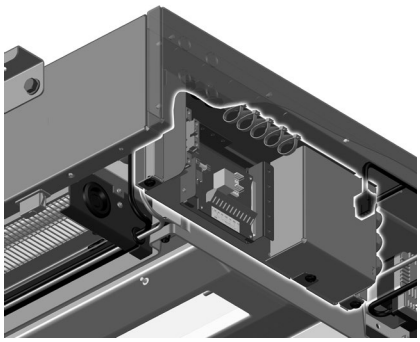

Fig.: Electrical connection unit

The required room temperature is set on the room thermostat. If it rises above the set value, the tangential fan starts up at the set speed and the thermoelectric actuator valve opens the water-side valve.
In the event of a possible motor fault, the EC fan is disabled and a potential-free fault message can be called up.

Fuses
There are two types of Fuses used in the KaDeck:
- Fuse on PCB: 250 V, 2.5 AL
- Fuse for the condensate pump: 250 V, 2.0 AT

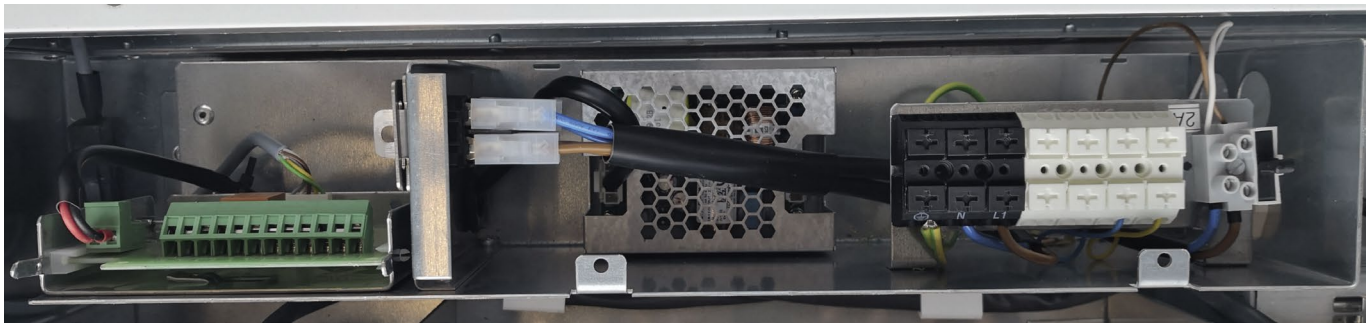

low voltage connections (Class 2) 120 V connections

Electrical cabling - BMS control

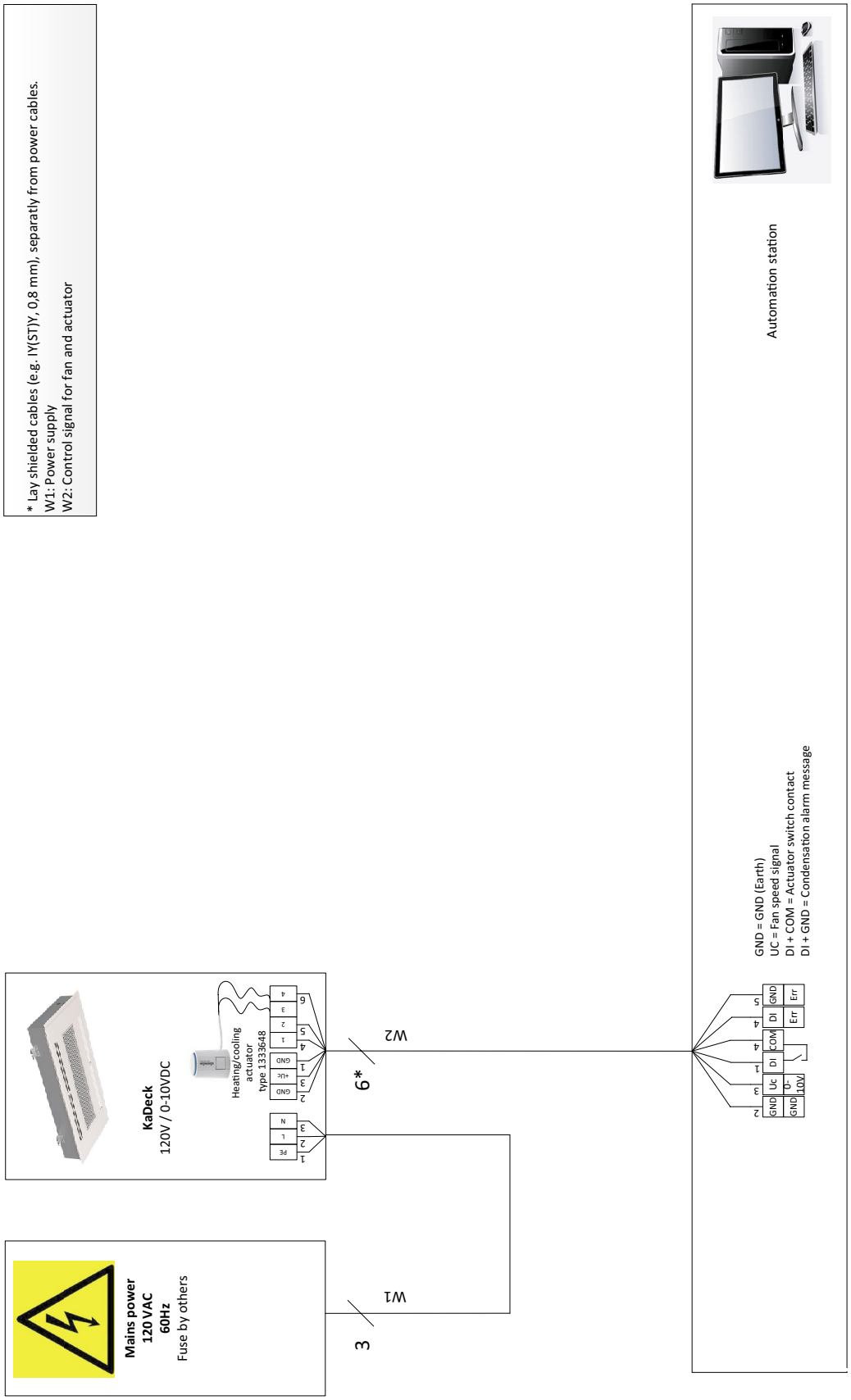

7 Operation and commissioning

IMPORTANT NOTE!
Refer to the separate instructions for operation using the Kampmann room controller.

7.1 Pre-commissioning checks

DANGER!
Check before initial commissioning whether all necessary conditions have been met so that the unit can function safely and properly.

Kampmann GmbH can also perform a functional check (optional). For contact details please refer to *Chapter 1.4 "Customer service" on page 5.*

Structural tests:
- Is the unit installed mechanically securely?
- Are all accessories and the panel securely fitted?

Electrical tests:
- Is all cabling laid in accordance with the applicable regulations?
- Are all wires connected in accordance with the electric wiring diagrams?
- Is the protective conductor connected and wired throughout?

Water-side test:
- Is the flow and return pipework properly connected?
- Are the valves correctly fitted? (Note the permitted installation position of the actuators!)
- Are all valves and actuators fitted correctly?
- Are the shut-off valves on-site open?

Condensation drain (only with units with a wet cooling function):
- Has the condensation drain from the unit to the dirty water network been checked using the water fed in for test purposes?
- Clean the condensation tray before initial commissioning and remove dirt and site dust.
- Is the condensation pump alarm contact triggered before the tray overflows?
- Are all the hoses from the condensation pump fixed with the clamps and are all bends made without kinks?
- When operating the condensation pump, check whether noises are produced by the hoses hitting the unit and eliminate this by fixing the hoses in place.

- Check whether the condensation pump is switched on at the relevant water level, the water is draining and the pump switches off again.
- Check whether the cooling valve is switched off when the maximum liquid level in the condensation tray is exceeded.

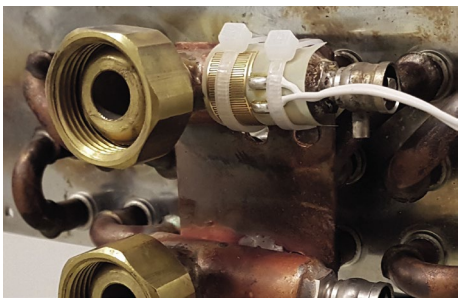

Dew point monitor (only with units with dry cooling function and an on-site dew point monitor):
- Functional test if the temperature falls below the dew point.
- Does the sensor have sufficient contact with the heat exchanger?
- Does the cooling valve close when switched off?
- Is the dewpoint monitor sensor clean?

Check filter:
- Check the filter to ensure that it is clean prior to initial start-up and replace if dirty.

! **IMPORTANT NOTE!**
Check the unit for any dirt (packaging remains, building dirt etc.) and remove if necessary.
Then vent the heat exchanger.

7.2 Venting the heat exchanger

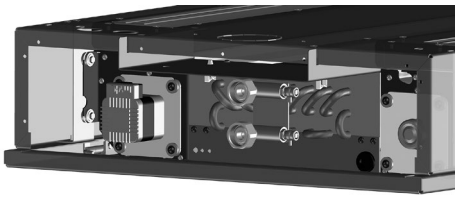

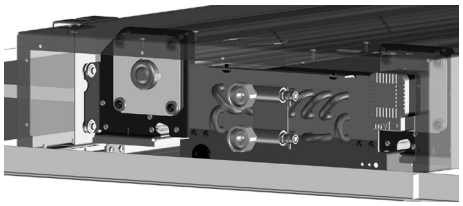

- Open all (on-site) shut-off devices and valves.
- Hold a receptacle in place to catch any water that escapes and protect the environment from spraying water.
- Then open the vent screw(s).
- Close the vent screw when no more air and only water escapes.

! **IMPORTANT NOTE!**
- *Vent all other connecting lines on site.*
- *Top up the water level if necessary.*
- *Repeat this work depending on the type and design of the hydraulic network on site.*

7.3 Switching on

- Switch on the mains voltage.
- Start up the unit using the control unit connected.
- Check the fan speeds by switching the stage selector.
- Check the correct operation of the heating or cooling valves by altering the room temperature setpoint. Take into account the different response times depending on the controller.
- Add water to the condensation tray - the pump should automatically switch on and off again.

Loud noises can occur with initial suction!

- Test the condensation alarm: add water until the external device (warning alert, shut-down mechanism) is triggered.

8 Maintenance

8.1 Securing against reconnection

WARNING!

Risk of death by unauthorised or uncontrolled restart!

Unauthorised or uncontrolled restarting of the equipment can result in serious injury or death.

- Before restarting, ensure that all safety devices are fitted and working properly and that there is no hazard to humans.
- Always follow the procedure described below to prevent accidental restart.

Secure against reconnection

1. Switch off the unit.
2. Switch off the energy supply.
3. Position a sign on the isolating switch from the supply network indicating that work is being performed in the hazard area and prohibiting the unit from being switched on. Provide the following information on the sign:
   - Switched off on:
   - Switched off at:
   - Switched off by:
   - Important: Do not switch on!
   - Important: Only switch on once you have ensured that there is no danger to personnel.

8.2 Maintenance schedule

The sections below describe maintenance work needed for the proper and trouble-free operation of the equipment:
If there are signs of increased wear during regular checks, adjust the required maintenance intervals to the actual wear and tear.

Interval	Maintenance task	Personnel
As required	Display on room control unit - first read the separate instructions for the room control unit	Caretaker/user
	Regular visual inspection of the fixings and examination of damage	Caretaker/user
Quarterly	Visual check of the filter, replacing as necessary or cleaning	Caretaker/user
Every six months	Clean the inside of the unit	Caretaker/user
Every six months	Check the water-side connections, valves and fittings	Caretaker/user
Every six months	Vent heat exchanger	Caretaker/user
Every six months	Check the electrical wiring	Caretaker/user
Every six months	Clean the outlet grille and remove dirt from the airflow	Caretaker/user
Every six months	Maintenance of the condensation pump, float switch and alarm signal (wet cooling model)	Caretaker/user
Every six months	Cleaning the condensation tray (wet cooling model)	Caretaker/user
Every six months	Monitor the dewpoint sensor for contamination and correct operation. Replace the sensor if necessary.	

8.3 Maintenance work

Personnel:
- Caretaker/user

Protective equipment:
- Protective gloves
- Goggles
- Lightweight breathing protection

The following safety instructions apply to all relevant maintenance work.

CAUTION!
Risk of injury from sharp metal housing!
The inner metal of the casing can have sharp edges.
- Wear suitable protective gloves.

WARNING!
Risk of injury from rotating parts!
The fan impeller can cause severe injuries.
- Switch off the unit and prevent it from reconnection before commencing any work on moving components of the fan. Wait until all parts have come to a standstill.

8.3.1 Changing filters

Switch off unit before opening the intake cover!

1. Open the intake cover until the securing catch snaps into place.

2. Press the securing hook to the inside of the unit and lower the intake cover.

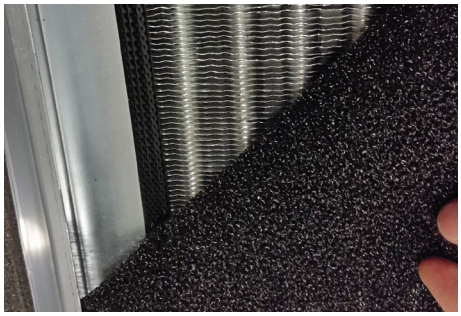

3. Remove filter from the Velcro fastening and clean/replace.

8.3.2 Cleaning / Visual inspections

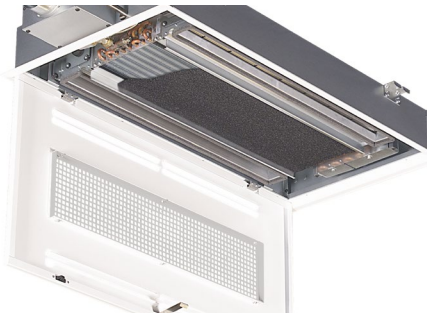

1. Open intake cover, as described in 8.3.1.

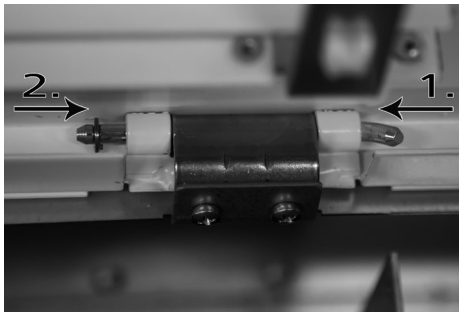

2. (optional)
The intake cover can also be fully removed to clean it, simply removing the securing bolts in the hinges. After cleaning the cover, as shown in the diagram, re-insert the securing bolts and secure with the securing washer.

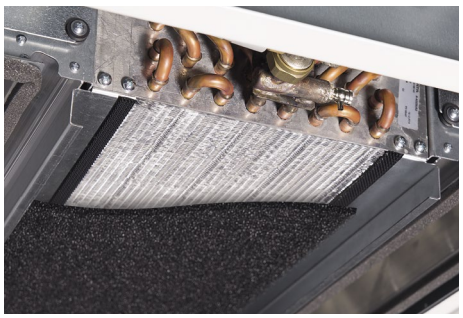

3. Check water connections and lines for leaks.

4. Check that the heat exchanger is clean and clean if necessary. Remove dust and deposits.
Carefully blast heat exchanger with compressed air or vacuum it.
Important: Fins bend easily!

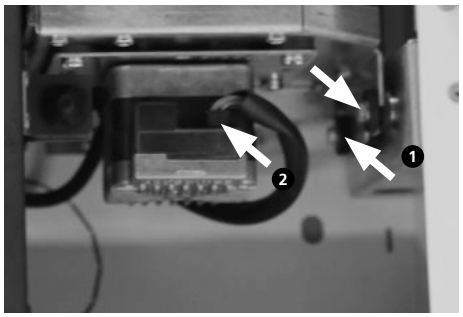

5. The fan unit can be removed to clean the discharge side of the heat exchanger. Simply loosen the screws indicated ❶ (4 x per fan) and remove the plug-in connector ❷.

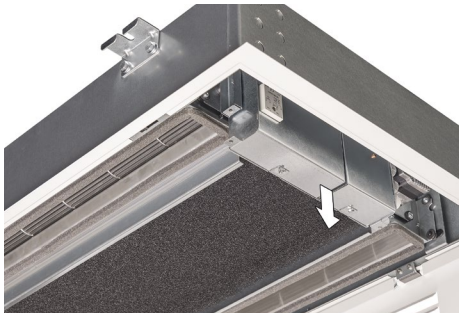

6. Check the electrical connections.
   - Loosen the screws and remove the electrical junction box to guarantee optimum access.

KAMPMANN
Genau mein Klima.

8.3.3 Extended cleaning work for the wet cooling model

In addition to the steps described under point 8.3.2, the wet cooling version also needs the condensation tray to be cleaned, and the condensation pump, float switch and drain need to be checked (including the on-site condensation drain).

Drain off any residual water to dismantle the condensation tray. Have a receptacle ready to catch any water. Remove the float switch by removing the cable tie and allow all water to drain into the container.

Water will flow from the condensation tray as well as from the float switch. Clean the float switch during every service. To do so, open the cover of the float switch and flush all parts with water.

Pull gently on the tray until it comes loose from the first catch. Allow any remaining water to flow out of the tray.

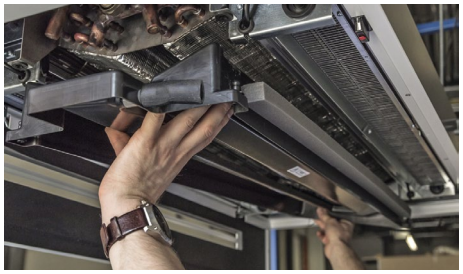

Loosen the tray from the remaining fixings. Make sure that you hold the tray horizontal to prevent remaining condensation from escaping.

Use conventional detergent to clean the tray. (Never use aggressive cleaning agents or detergents, which could attack the ABS tray or adhesives).
After cleaning, re-fit the condensation tray and pump in reverse order.

9 Faults

The following chapter describes possible causes of faults and the work needed to rectify them. Should faults occur frequently, shorten the maintenance intervals in line with the actual loading on the unit.
Contact the manufacturer with any faults that cannot be rectified using the following information (*Chapter 1.4 "Customer service" on page 6).*

Behaviour in the event of faults

The following applies:

1. Immediately switch off the unit with faults that pose an immediate danger to persons or property.
2. Determine the cause of the fault.
3. Switch off the unit and prevent it from being reconnected if rectifying the fault requires work in the hazard area. Immediately advise a supervisor on site about the fault.
4. Either rectify the fault yourself or have it repaired by authorised personnel, depending on the nature of the fault.

The fault table (Chapter 9.2 "Fault table" on page 43) provides information on who is authorised to rectify and remedy faults.

9.1 Fault table

Only permit authorised personnel to rectify operational faults! The table below shows possible faults and the action needed to rectify them:

Fault	Possible cause	Actions	Personnel
Fan is not running	Unit switched off	Switch on the unit by the control	Qualified personnel
	No power supply	Check power supply and connect	
	Electrical cable not connected or incorrectly connected	Check electrical wiring and correct if necessary	
	No demand by controller, therefore fans switch off	Change controller settings, if required	
Unit too loud	Speed too high	Set lower fan speed	User/ Caretaker
	Air intake or air outlet openings blocked	Free air intake and outlet grilles	
	Filter dirty	Replace filter	
Unit not heating or cooling sufficiently (LPHW/CHW)	Fan not switched on	Switch on fan at controller	User/ Caretaker
	Airflow too low	Set higher fan speed	
	Filter dirty	Replace filter	
	No heating or cooling medium	Switch on heating and/or cooling system, switch on circulation pump, vent unit(s)/ system	Qualified personnel
	Valves do not work	Replace faulty valves	
	Water volume too low	Check pump output, check hydraulics	
	Setpoint temperature on the controller set too low/high	Adjust temperature setting on controller	
	Control unit with integrated sensor and/or external sensor is exposed to direct sunlight or positioned over a heat source	Control unit with integrated sensor or external sensor at a suitable position	
Water escaping from unit	Condensation drain not properly installed	Check correct operation of condensation pump, check and clean condensation drain (if fitted)	Qualified personnel
	Chilled water line incorrectly insulated	Check insulation	
	Condensation drain outlets blocked	Clean condensation drains and check for adequate gradient	
	Hydraulic connection not properly done	Check flow and return and tighten, if necessary	

10 Dismantling and Disposal

After the unit has come to the end of its service life, it must be dismantled and disposed of in an environmentally friendly manner.

10.1 Safety information for dismantling and disposal

Incorrect dismantling

WARNING!

Risk of injury due to improper dismantling!

Stored residual energy, angular components, points and edges on and in the unit or on the tool required can cause injury.

- Make sure that you have enough space before starting work.
- Handle open sharp-edged components carefully.
- Make sure that the workplace is clean and tidy! Components and tools stacked loosely or spread around tools represent a source of accidents.
- Dismantle the components carefully. Note the heavy net weight of some components. Use lifting gear if necessary.
- Secure components to ensure that they do not fall or topple.
- Contact the manufacturer if in doubt.

10.2 Dismantling

Before commencing:

- Switch off the unit and prevent it from being switched on again accidentally.
- Physically disconnect the entire power supply from the unit and discharge residual energy.
- Remove operating and auxiliary materials and dispose of properly.

Then clean assemblies and components properly and dismantle in compliance with applicable local safety and environmental regulations.

10.3 Disposal

Recycle dismantled components if no return or disposal agreement has been concluded:

- Scrap metals.
- Recycle plastics.
- Sort and dispose of other components.

IMPORTANT NOTE!

Environmental hazard from incorrect disposal!

Incorrect disposal can present a hazard to the environment.

- Electrical scrap, electronic components, lubricants and other auxiliary materials represent hazardous waste and should only be disposed of by authorised specialist companies.
- If in doubt, seek information on environmentally responsible disposal at the local municipal authority or specialist disposal company.

Kampmann.eu/KaDeck
Kampmann.ca/KaDeck

Kampmann GmbH & Co. KG
Friedrich-Ebert-Str. 128 - 130
49811 Lingen (Ems) Germany

P +49 591 7108-0
F +49 591 7108-300
E export@kampmann.de
W Kampmann.eu

Kampmann Heating, Cooling, Ventilation Ltd
1628 West 1st Ave
Suite #221
Vancouver, BC
Canada V6J 1G1

P +1 604 789 5779
E info@kampmann.ca
W Kampmann.ca

I610 11/20 US | SAP Nr. 1341610